HL109**Series Thermostat User Manual**

HL109Series thermostats are available for individual room temperature control in residential, industrial and business premises. Suitable for 2-pipe or 4-pipe Fan Coil configuration.

HL109adopt digital control technology with large LCD display, It shows the following items: working states (cool, heat or ventilation), the speed of fan coil, room temperature, set-point. There are following keys on the panel: On/Off "⏻", Exchange mode (cool, heat "❄" Select fan speed (high, medium, low or auto) "✈", set-point temperature "▲" and "▼".

MODEL DENOMINATIONS

HL109 □ - □

R: IR remote function. Blank is invalid. (*remote controller should be ordered additionally*)
L: Backlight available. Blank is invalid.

DA2: Control Motorized Valve (DA2: Control 3-wire or 2-wire FCU valve) and 3-speed fan;
When the temperature reaches the set-point, it will close the Motorized Valve with the fan still running.
DB2: Control Motorized Valve (DB2: Control 3-wire or 2-wire FCU valve) and 3-speed fan;
When the temperature reaches the set-point, it will close the Motorized Valve and Fan both.
FCV2: Control 4 pipe fan coil units, Control two Motorized Valves and 3-speed fan, when the temperature reaches the set-point, it will close the Motorized Valves with the fan still running.

BASIC FEATURES

- Room temperature setting
- Manual or Auto 3-speed changeover
- Defrost (low temperature protection)
- Auto Restart (Option)
- IR remote control (Option)
- Blue Backlight (Option)

STATUS DISPLAY

- Working Status: Cool ❄ , Heat ☀
- Fan Speeds: Low , Medium , High and Auto
- Room temperature display
- Temperature setting display

SPECIFICATIONS

- Sensing element: NTC
- Accuracy : ± 1℃
- Set-point range: 5℃ to 35℃
- Display range: 0～50℃
- Operation environment: 0～45℃
- Operating Humidity: 5～90%RH (non-condensing)
- Power supply: AC 85～250V, 50/60Hz
- Switch current rating: Resistive: 2A, Inductive: 1A
- Rated Power: < 2 W
- Wirings: Screw-in terminals, each terminal capable of accepting 1 x 2.5 mm^2 wires
- Housing: ABS + PC Flame Retardant
- Dimensions: 86 × 86 × 13 mm (W × H × D)
- Hole pitch: 60 mm (Standard)
- Protection Class: IP20
- Display: LCD

OPERATION

✍On/Off: Press " ⏻ to turn on, press " ⏻ again to turn off thermostat and its output.

✍Setting temperature: Press "▼" to reduce set-point, press "▲" to raise set-point, and 0.5℃ changed once.

✍Mode Selection: Press "❄" to change system working in cooling " ❄, heating "☀" or ventilation, the related icon will flash,and it will be confirmed automatically after 5 seconds.

✍Fan Speed Selection (HL109DA2/DA2E/DB2/DB2E/FCV2/FCV2E): Press "✈' to change fan speed among "(Hi)", (Med)", "(Low)" or "Auto".

Under auto fan speed "Auto", the fan-speed will be changed automatically. Auto LOW-speed When the difference between room-temperature and set-point exceed 1℃, Auto MED-speed When exceed 2℃, Auto HI-speed When exceed 3℃.

✍Control Motorized Valve under 2-pipe configuration (HL109DA2/DA2E/DB2/DB2E): If the difference between room

temperature and set-point exceed 1℃, FCU valve will be open; if room temperature and set-point are equal, HL109DA2/DA2E will close the FCU valve with the fan still running, HL109DB2/DB2E will close the FCU valve and Fan both.

✍ Control FCU Valve under 4-pipe configuration (HL109FCV2/FCV2E): In cooling, when the room temperature is higher than set-point, the cooling Valve will be opened. Otherwise it will be closed. Heating valve is always closed. In heating, When the room temperature is lower than set-point, the heating valve will be opened. Otherwise it will be closed. Cooling valve is always closed.

AUTO RESTART

✍ When the thermostat is at ON status for one minute, if power cut, it will return back to running automatically with the status how it is one minute ago after power coming back.

✍ When the thermostat is at OFF status for one minute, if power cut, it will keep OFF status after power coming back.

DEFROST (LOW TEMPERATURE PROTECTION)

✍Description: when the thermostat turns off and the room temperature is lower than 5℃, it will be turned on automatically in heating mode with "☀" showing, under HL109DA2/DA2E/DB2/DB2E/FCV2/FCV2E models, the system will be in heat mode and fan runs in high speed. The thermostat will turn off when room temperature is higher than 7℃.

✍Set low temperature protection: Turn off the thermostat, press "❄" and "▲" buttons simultaneously and hold for 3 seconds, it will display "00" or "01", press "▼" or "▲" key to adjust. "00" indicates low temperature protection invalid, "01" indicates low temperature protection function valid. The default is "00".

WIRING DIAGRAMS

HL109**DA2/DA2E/DB2/DB2E（2-wire）**

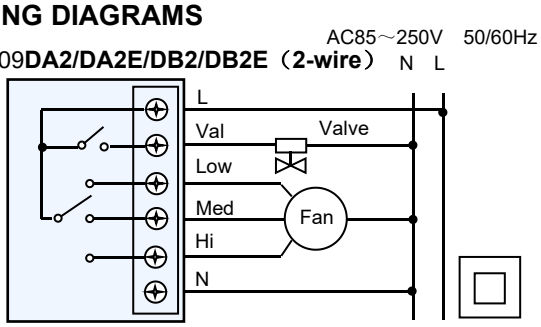

HL109**DA2/DA2E/DB2/DB2E（3-wire）**

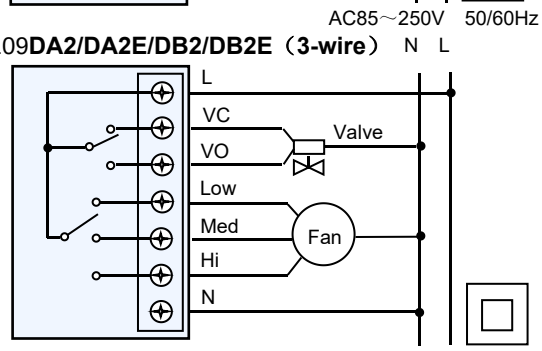

HL109**FCV2/FCV2E**

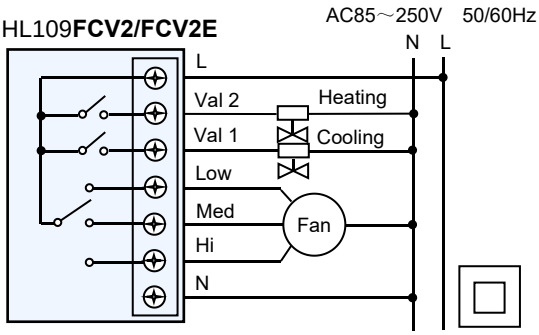

MOUNTING

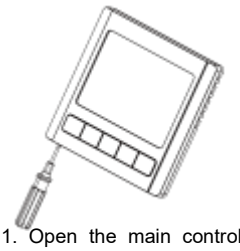	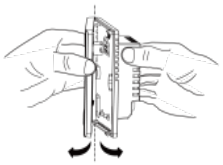	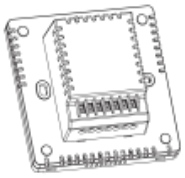	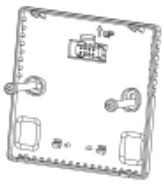	
1. Open the main control panel: put the screwdriver (3.5mm) into the block 4mm along the bevel. Prize up, open the clips.	2. Take off the wires.	3. As per wiring diagram, connect it with terminals, fixed by the screwdriver.	4. Put the connected thermostat onto the back panel in the wall, then fix it with the two screws in the packing box.	5. Put the cover with 30 degree angle, then fix the up two clips. 6. Push the places of the two down clips, fix the cover, and finish the installation.

Note: Be sure to connect all the wires as per the wiring diagrams and keep it away from water, mud and other material so as to prevent the unit being spoiled!